Parts List for the **Heavy Duty High Pressure Hose Reel (5000 PSI)**

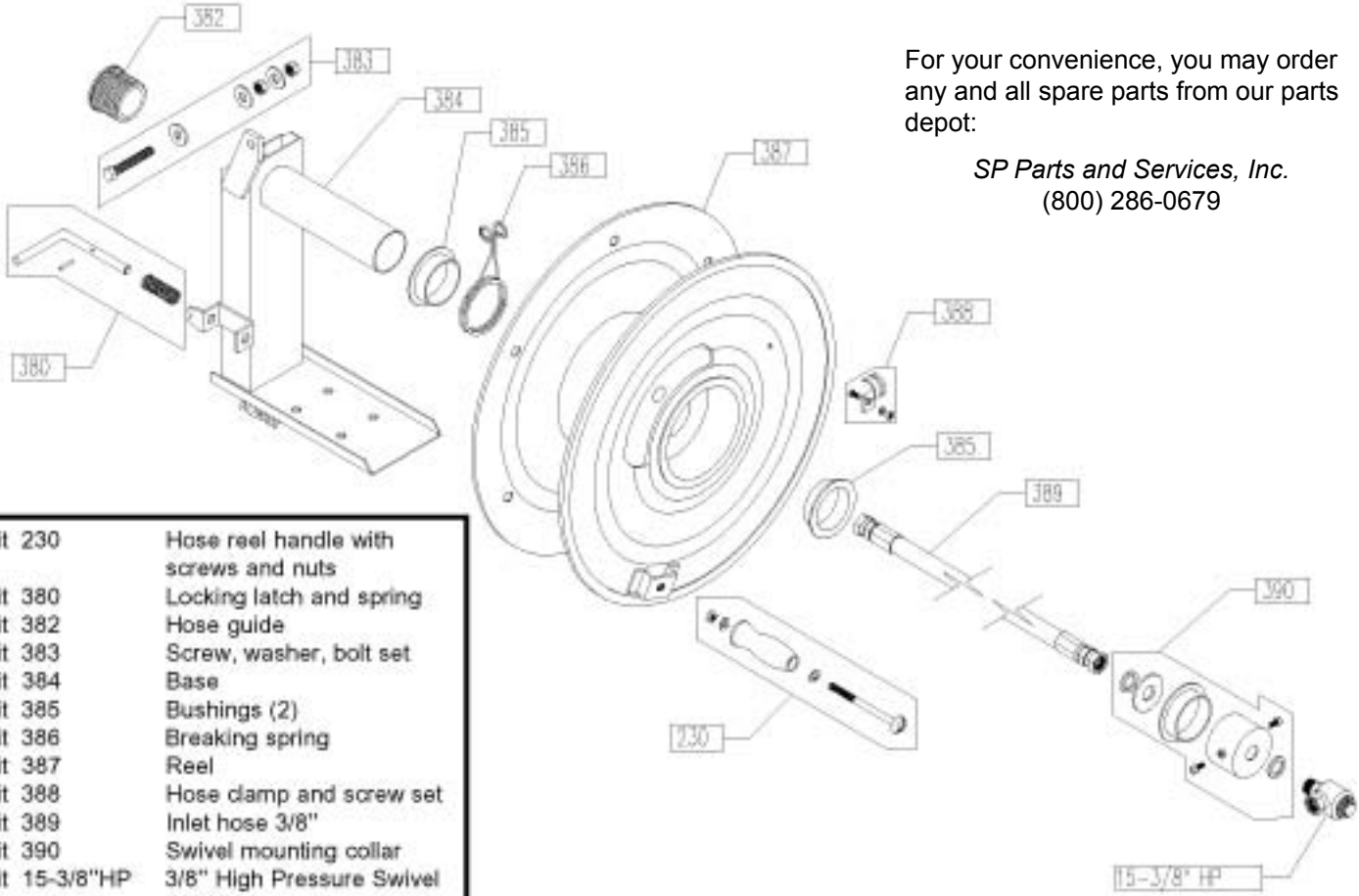

For your convenience, you may order any and all spare parts from our parts depot:

SP Parts and Services, Inc.
(800) 286-0679

Kit 230	Hose reel handle with screws and nuts
Kit 380	Locking latch and spring
Kit 382	Hose guide
Kit 383	Screw, washer, bolt set
Kit 384	Base
Kit 385	Bushings (2)
Kit 386	Breaking spring
Kit 387	Reel
Kit 388	Hose clamp and screw set
Kit 389	Inlet hose 3/8"
Kit 390	Swivel mounting collar
Kit 15-3/8"HP	3/8" High Pressure Swivel 5000 psi